intermot s.r.l.

W.08-G100 (Fixed displacement)

(Preliminary edition)

Oil Reducer-Lit	
Horizontal	1.4
Vertical	2.3

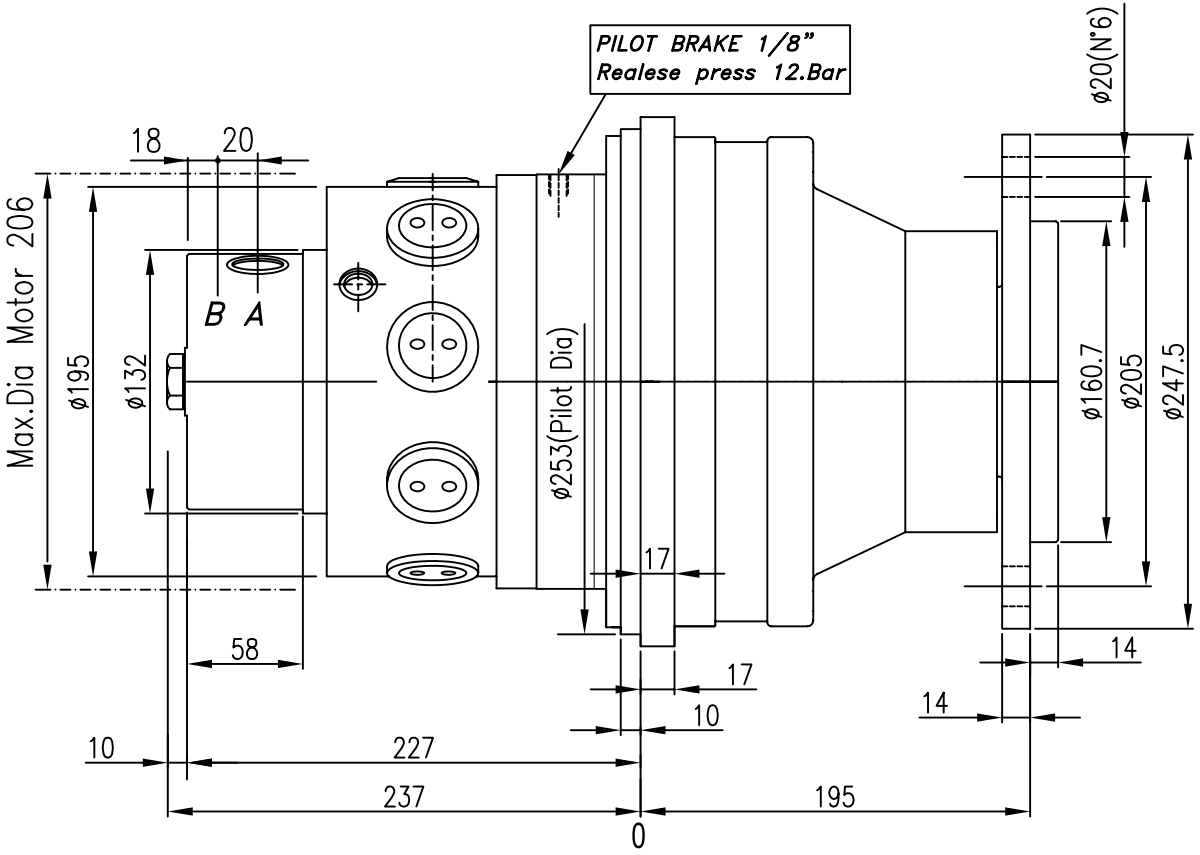

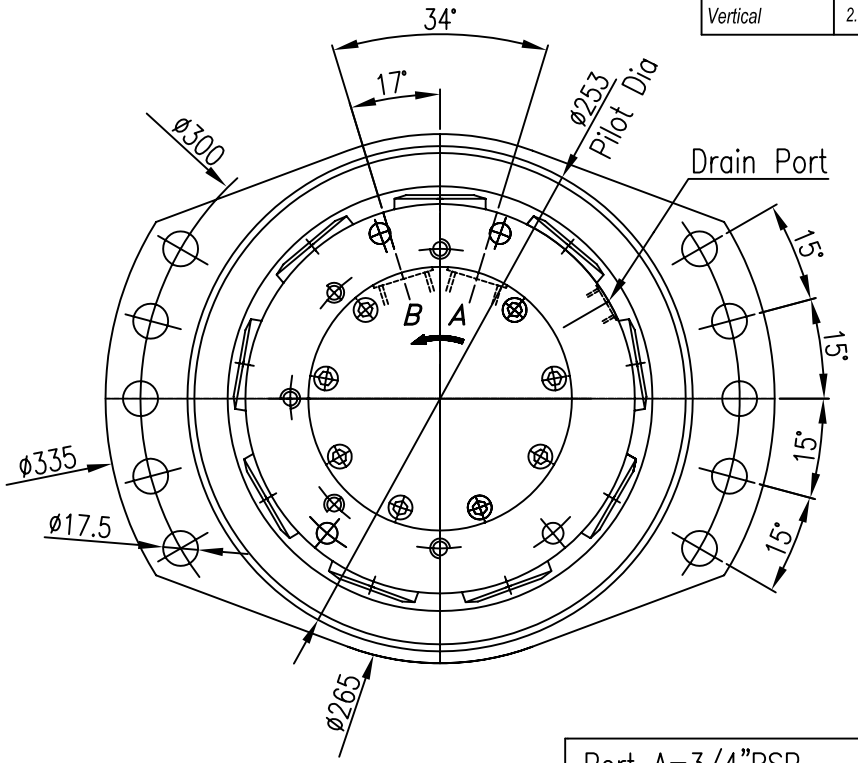

Port A=3/4"BSP
Port B=3/4"BSP
Drain Port=1/4"BSP

Reducer Ratio	Output Torque Nm Cont:	Output Torque Nm Max:	Cont Press. Bar	Max Press. Bar	Power. HP	Total Displacement cc/Rev	Max freewheeling speed Rpm	Max 0uput Rpm
1:3.77	1490	2100	250	350	82	383	530	590
1:4.12	1650	2300	250	350	82	419	480	530
1:5.16	1900	2850	250	350	82	524	380	420
1:6	2350	3300	250	350	82	610	335	370
1:7.25	2850	4000	250	350	82	736	270	300

OPTIONAL

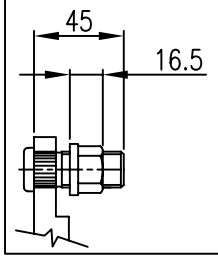
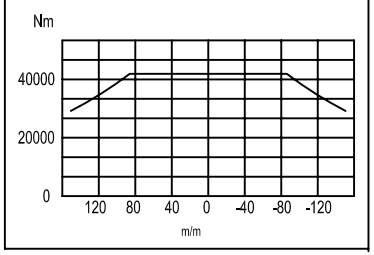
Static radial load N